REVISIONS		
ISS	ZONE	DESCRIPTION\PER REQUEST\DATE

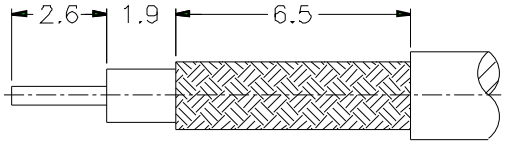

RECOMMENDED
CABLE STRIPPING DIM'S

1. CRIMPED FERRULE
   HEX CRIMP SIZE .151"
2. CONTACT PIN TO SOLDER

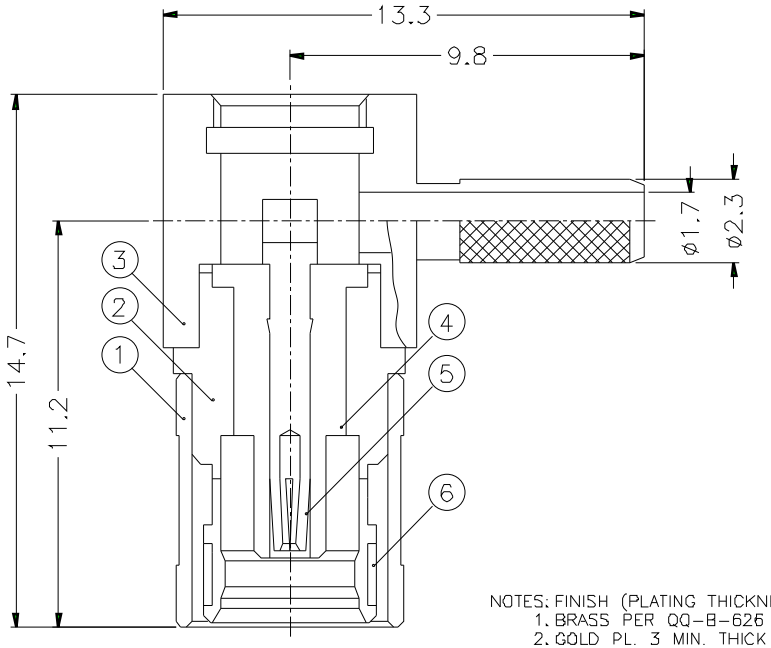

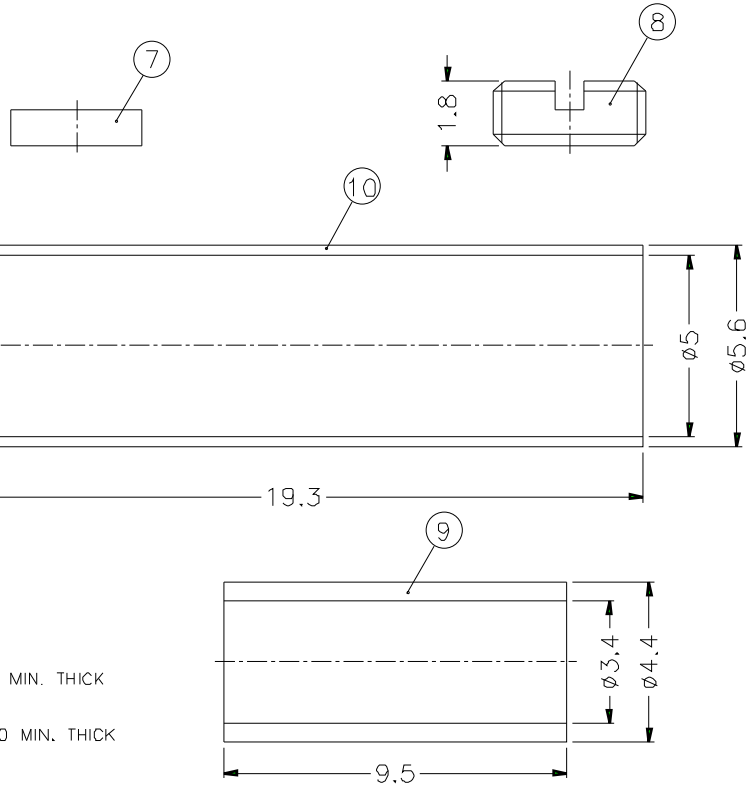

NOTES: FINISH (PLATING THICKNESS IN MICRO-INCHES)
1. BRASS PER QQ-B-626
2. GOLD PL. 3 MIN. THICK OVER NICKEL PL 100 MIN. THICK OVER COPPER STRIKE
3. BERYLLIUM COPPER PER QQ-C-530
4. GOLD PL. 30 MIN. THICK OVER NICKEL PL. 100 MIN. THICK OVER COPPER STRIKE
5. TEFLON MIL-P-19468

NO.	DESCRIPTION	MATERIAL	FINISH	Q'TY	DRAWING NO.
10	HEAT SHRINK TUBING			1	HT-56/5X193
9	FERRULE	COPPER	NOTE 2	1	FR-44/34X95C
8	COVER	NOTE 1	NOTE 2	1	SMA1112A3-8-B
7	INSULATOR	PE	NATURAL	1	SMB5090-7
6	RETAINER RING	NOTE 3	NATURAL	1	SMB5000-6
5	CONTACT PIN	NOTE 3	NOTE 4	1	SMB5090-5-B
4	INSULATOR	NOTE 5	NATURAL	1	SMB5090-4T-50
3	BARREL	NOTE 1	NOTE 2	1	SMB5090-3-23/17-A
2	BODY	NOTE 1	NOTE 2	1	SMB5090-2-A
1	SHELL	NOTE 1	NOTE 2	1	SMB5000-1

DIMENSIONS ARE IN MILLIMETERS

UNLESS OTHERWISE SPECIFIED TOLERANCES
0.5-6 = ±0.2
6-30 = ±0.4
30-120 = ±0.6
120-315 = ±1
315-1000 = ±1.6
1000-2000 = ±2.4

SCALE 5/1 | ISSUE A | FILE NO

PART NO. SMB6112A1-3GT30G-5A-50

APPROVED	DATE	10-11-01'
CHECKED	DATE	10-11-01'
DRAWN	DATE	10-11-01'

Amphenol

TITLE
SMB R/A CRIMP PLUG

DRAWING NO.
KJ-SMB6112A1-3GT30G-316U/D-50

ITEM NO.